6GFM12V-150 (12V150AH)

Outer dimensions (mm)

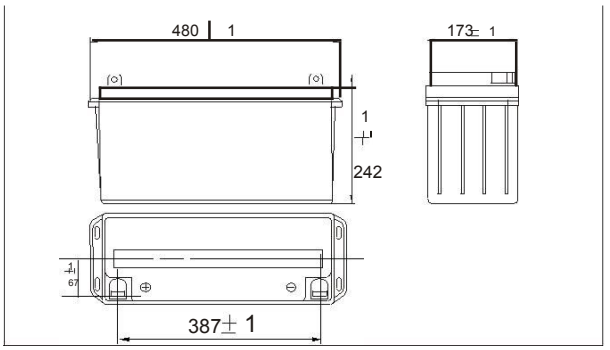

Specifications

Nominal Voltage		12V
Rated capacity (10 hour rate)		150 Ah
Dimensions	Total Height	242 mm (9.49inches)
	Height	242 mm (9.49 inches)
	Length	482 mm (19.1 inches)
	Width	173 mm (6.73 inches)
Weight Approx		39 Kg (88lbs)
Package size:495X180X270MM		

Terminal Type (mm)

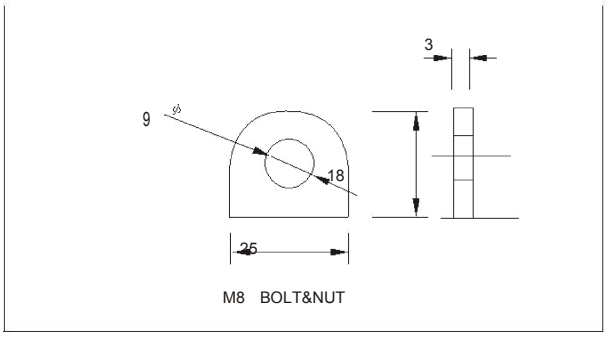

Characteristics

Capacity 25℃ (77℉)	10 hour rate(15 A) 5 hour rate(24 A) 1 hour rate(90 A)	150 AH 120AH 90 AH
	1.5 hour discharge to 10.5V	60 A
Internal Resistance	Full charged Battery at 25℃ (77℉)	2 mΩ
Capacity affected by Temperature (10hour rate)	40℃(104℉) 25℃(77℉) 0℃(32℉) -15℃(5℉)	102% 100% 85% 65%
Self-Discharge at 25℃ (77℉)	Capacity after 3 month storage Capacity after 6 month storage Capacity after 12 month storage	91% 82% 64%
Terminal	T12	
Charge (constant Voltage) Cycle	Initial Charging Current less than 60 A Voltage 14.10-14.40V	
Charge (constant Voltage) Float	Voltage 13.50-13.80V	

Discharge Curves 25℃ (77℉)

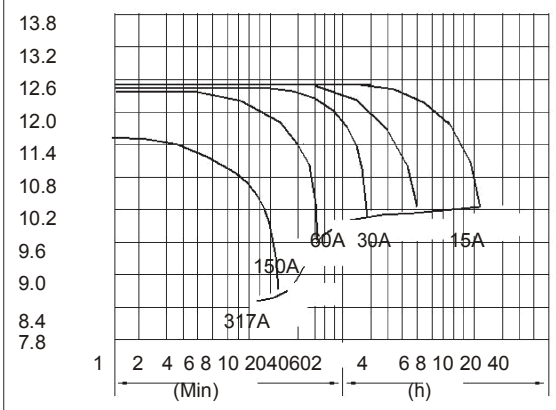

Constant Current(Amp) and Constant Power(Watt) Discharge Table at 25℃(77℉)

Time		5min	10min	15min	30min	1h	2h	3h	4h	5h	8h	10h	20h
9.60V	A	4958	3380	2736	1839	972	576	429	338	281	201	182	98.9
	W	465	286	240	163.5	84.6	50.1	37.5	29.3	24.3	17.10	15.45	8.25
10.20V	A	4969	3189	2689	1835	957	577	434	340	283	200	182	96.8
	W	450	255	210	153.0	81.9	48.9	36.6	28.8	24.0	16.95	15.15	8.25
10.50V	A	4916	2906	2398	1761	948	567	426	337	281	199	179	97.5
	W	434	241	195	141.0	79.2	47.7	35.7	28.4	23.4	16.50	15.00	8.10
10.80V	A	4867	2776	2250	1634	922	559	421	335	277	196	178	96.5
	W	419	226	180	126.0	76.5	46.5	34.5	27.6	22.8	16.05	14.25	7.65
11.10V	A	4754	2612	2099	1474	900	550	410	329	272	192	172.0	92.7
	W												